MENNEKES
MY POWER CONNECTION

Plug
PowerTOP

Part number: 3853

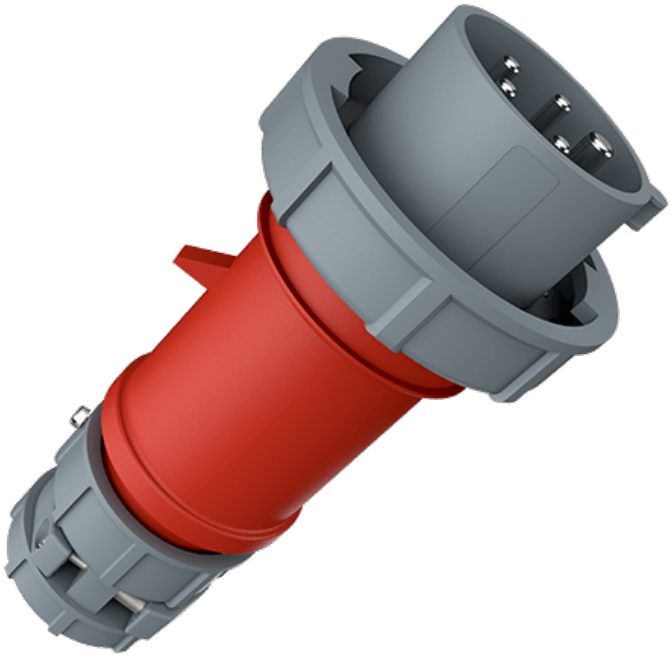

MENNEKES
Elektrotechnik GmbH & Co. KG

Aloys-Mennekes-Straße 1
57399 Kirchhundem
GERMANY

www.**MENNEKES**.org

Version Nov 01 025 Subject to change without notice. No liability accepted for printing errors.

Product Description

- screw connection technology
- highly heat resistant contact carrier, nickel plated contacts
- protection against kinking
- strain relief
- cable gland and external cable grip

Technical Details

Plug PowerTOP	3853
Product serie	PowerTOP
Ampere	32A
Number of poles	5p
Clock position	6h
Nominal voltage AC	400V
Nominal frequency	50 - 60 Hz
Protection type IP	IP67
Contact carrier	highly heat resistant contact carrier, nickel plated contacts
Connection	screw terminals
Contact screw drive	PZ2, slot
Recommended wire end treatment for supply cable connection terminal	ferrule square gasproof crimped
Phase inverter	without phase inverter
Pilot contact	without pilot contact
Conductor cross-section min.	2.5 mm^2
Conductor cross-section max.	6 mm^2
Cable kink protection	integrated in cable gland
Protective grommet	without protective grommet
Protective cap	without protective cap
Weight (net)	416 g
Packaging unit	10 pcs
Quantity per pallet	480 pcs
EAN / identification number	4015394099758

Permissible ambient conditions

	Min.	Max.
Permanent ambient temperature	-25 °C	40 °C

Material properties

Cover	PA6 red [similar RAL 3013]
Front part	PA6 squirrel grey [similar RAL 7000]
Bayonet ring	PC/PET squirrel grey [similar RAL 7000]
Fastening	PC/PET squirrel grey [similar RAL 7000]

Material resistance

The material resistance overview can be found on the website in the section “Knowledge” - “Product knowledge” - “Materials”.

Material and enviromental properties

RoHS 2011/65/EU incl. 2015/863/EU	✓
POP regulation (EU) 2019/1021	✓

Regulations and Standards

Norm	DIN EN IEC 60309-2
Declaration of Conformity	CE
Test label	CB Zertifikat, VDE, EAC, CQC

Dimensional Drawing

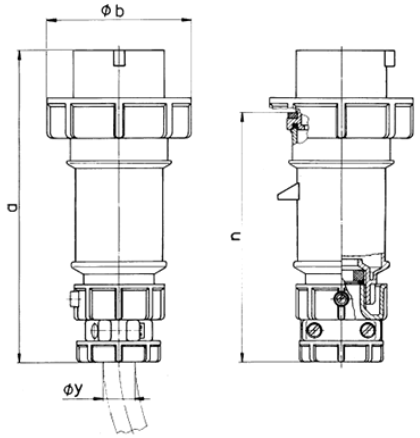

Drawing	Amp.	16			32		
2 MB 171	Poles	3	4	5	3	4	5
Dim. in mm	a	162	172	186	199	199	213
	b	71	79	89	95	95	102
	n	129	139	152	157	157	172
	y	19	19	22	24.5	24.5	28.5
Terminal for cond. cross		1	1	1	2.5	2.5	2.5
section (mm²) min.-max.		—2.5	—2.5	—2.5	—6	—6	—6