MENNEKES
MY POWER CONNECTION

Panel mounted socket with TwinCONTACT

Part no. 1793

- screwless spring terminals
- suitable for through wiring
- straight

Technical specifications

Ampere	32 A
Poles	4 p
Voltage	50-500 V
Clock position	10 h
Hertz	300-100 Hz
Connection technology	Screwless - TwinCONTACT
Contact	standard
Protection type	IP44
Flange	75x75 mm
Fixing hole	60x60 mm
Weight	188 g

Drawing

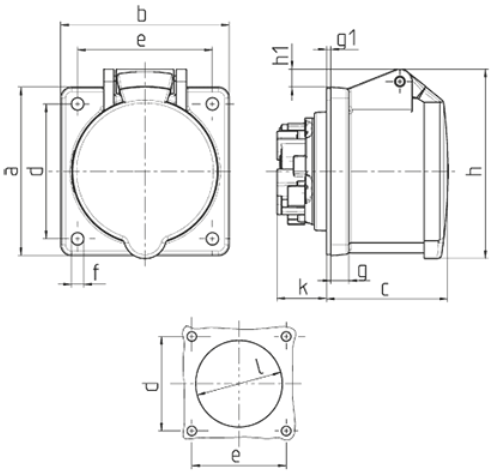

Drawing	Amp.	16			32		
1 MB 464	Poles	3	4	5	3	4	5
Dim. in mm	a	75	75	75	75	75	75
	b	75	75	75	75	75	75
	c	53	53	54	64	64	64
	d	60	60	60	60	60	60
	e	60	60	60	60	60	60
	f	5.5	5.5	5.5	5.5	5.5	5.5
	g.	8	8	8	8	8	8
	g.1	2	2	2	2	2	2
	h	75	80	85	89	89	95
	h1		5	8	10	10	12
	k	22	22	22	28	28	28
	l	43	52	57	60	60	64
Terminal for cond. cross		1.5	1.5	1.5	2.5	2.5	2.5
section (mm²) min.-max.		—4	—4	—4	—6	—6	—6

Subject to modificat. No liability for misprints.